▶▶▶▶ CIRCUIT BREAKER ◀◀◀◀

Automotive reset provides protection in installation where it is not possible to manually reset breaker because of location or safety requirement.
Used in DC applications, automative, RV, air conditioners, battery charge, machine tool any application requiming over current protection.

The trip time can be made according to customer's request

▶▶▶▶ WIPER MOTOR ◀◀◀◀

- Wipe motor for fram tractor and boats use 12V 0.8AMP or 24V 0.4MAP 110-90 sweep.
- Automatic stop
- About 40-60 times per minute
- Switch on cover
- Shaft lengh 55 m/m, 85 m/m,105 m/m
  (S) (M) (L)

WPS-R

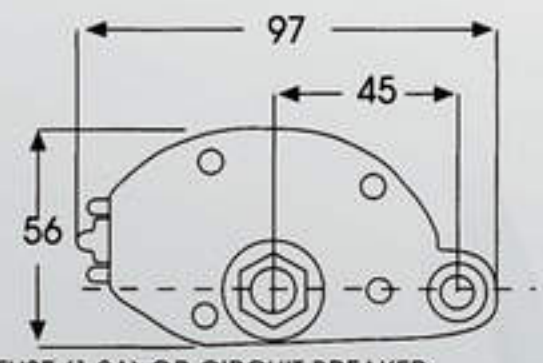

FUSE (1-2A) OR CIRCUIT BREAKER

WPL-B

WPM-B

WG9A

WG11B
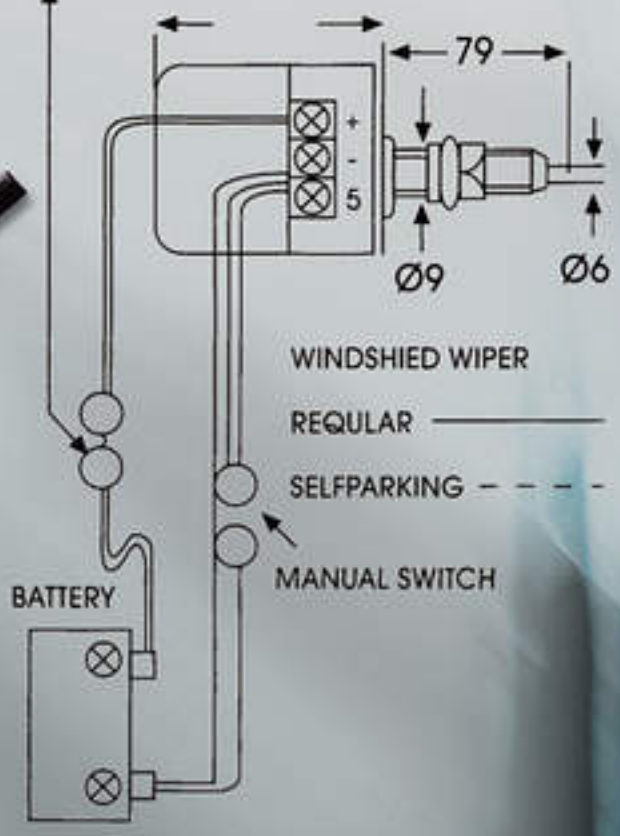
WG9B