AES-1118-11
On-Off 2 Position
125V, 3Amps

AES-1118-18
125V, 3Amps, On-Off

AES-1118-12
Toggle Switch
12VDC, 10Amps

Item no.	Circuitry	Terminal	Type	Remark
AES-1118-12	ON-OFF	2 screws	SPST	
AES-1118-12M	(ON)-OFF	2 screws	SPST	
AES-1118-12A	ON-OFF	2 screws	SPST	with extra ON/OFF face plate

AES-1118-14
Toggle Switch
12VDC, 10Amps

Item no.	Circuitry	Terminal	Type
AES-1118-14	ON-OFF-ON	3 screws	SPDT
AES-1118-14M	(ON)-OFF-(ON)	3 screws	SPDT
AES-1118-14A	ON-ON	3 screws	SPDT
AES-1118-14B	ON-OFF	3 screws	SPDT

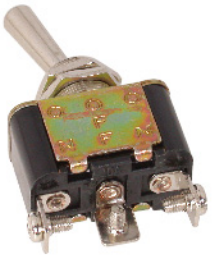

AES-1118-15
Toggle Switch
12VDC, 10Amps

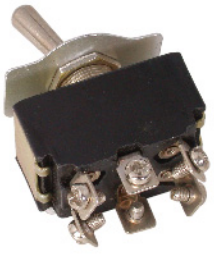

Item no.	Circuitry	Terminal	Type	Remark
AES-1118-15	ON-OFF-ON	6 screws	DPDT	
AES-1118-15A	ON-ON	6 screws	DPDT	no face plate
AES-1118-15B	ON-OFF	4 screws	DPST	
AES-1118-15M	(ON)-OFF-(ON)	6 screws	DPDT	

AES-1118-21
On-Off-On
12V, 10Amps

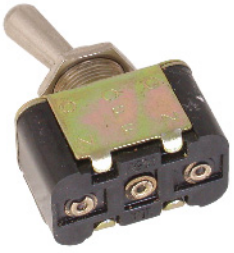

AES-1118-21A
On-Off
12V, 10Amps

AES-1118-13N
Pollak # 34-212
Heavy Duty Toggle Switch
SPST, 2 position ON/OFF.
With 2 screws terminals.
12VDC 50Amps

AES-1118-22N
Valley Forge # L-1458
General # 2159
Pollak # 34-218
S.P.D.T. 3 Position, S.P.S.T.
On-Off-On
3 Heavy Copper Screws
6-12VDC, 35 Amps, Screw Type.

AES-1118-24
(R13-28F)

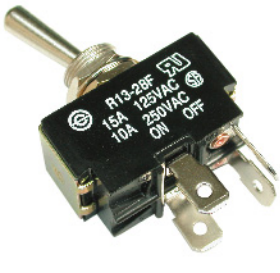

All specifications and information is subject to change without notice.

AES-1118-16

On-Off-On
Merit No. 32100

AES-1118-17

Push-Pull Switch (short)
7-13m/m
Merit no. 210000
Available to be with Bigger Head.

AES-1118-28

Push-Pull Switch (Middle)
Length: 14-22m/m
Available to be with Bigger Head.

AES-1118-28A

Push-Pull Switch (Middle)
Length: 14-22m/m

AES-1118-29

Push-Pull Switch (Middle)
Length: 14-22m/m
Plug-in Type

AES-1118-23

Push Pull Switch (Long)
Length: 21-29m/m.

AES-1118-27

Weatherproof Toggle Switch
12VDC 25Amps; 24VDC 15Amps.
2P, SPST, ON-OFF.
Meet IP67

AES-1118-27A

Weatherproof Toggle Switch
12VDC 25Amps; 24VDC 15Amps
3P, SPST, ON-OFF-ON
Meet IP67

AES-1118-27C

Same as AES-1118-27A.
With additional weatherproof cap

AES-1118-27C-1

Same as AES-1118-27C
Wires with bullet terminals

AES-1118-30

General # 2100

Toggle Switch
S.P.S.T., 2 Terminals "Off-On".
Mounting Stem 3/8" Long,
3/8" Diameter, w/3/8"*24 Thread.
Bat Handle.
Rating: 20 Amps @6 Volts.
10 Amps @12 Volts.

AES-1118-31

General # 2103

Toggle Switch
S.P.S.T. "Off-On", 2 Screw Terminals.
With Nickel Plated "Off-On" Indicator
Plate Assembled. Mounting Stem
15/32" long, 15/32" Diameter. Ball Handle.
Rating: 3 Amps, 250 Volts AC
5 Amps, 125 Volts AC.

AES-1118-32

Toggle Switch
SPDT ON-OFF-ON 3 screw terminals.
With nickel-plated "ON-ON" face plate assembled.
Mounting Stem 15/32" long, 15/32" Diameter.
Ball Handle.
Rating: 3 Amps, 250VAC
5Amps, 120VAC

AES-1118-33

Toggle Switch
S.P.S.T. "Off-On", 2 Screw Terminals.
With Nickel Plated "Off-On" Indicator
Plate Assembled. Mounting Stem 15/32" long,
15/32" Diameter. Ball Handle.
Rating: 3 Amps, 250 Volts AC
5 Amps, 125 Volts AC.

AES-1118-34

Toggle Switch
S.P.S.T. "Off-On"
2 terminals. Alum,
Brass Housing with Led.
Rating: 15 Amps at 12 Volt.

AES-1118-34A

Same as AES-1118-34
Except with bulb.

AES-1118-35

Toggle Switch
with two 6" wire leads.
S.P.S.T. "Off-On". Bat Handle.
Rating: 3 Amps, 250 Volts AC.
6 Amps, 125 Volts AC.

AES-1118-36

Weatherproof Toggle Switch
12VDC 10Amps
2 position ON/OFF.

AES-1118-37

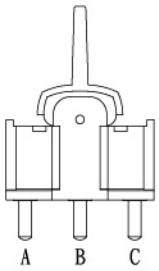

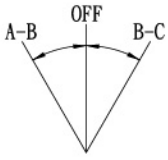

AES-1118-38

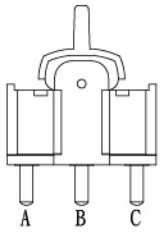

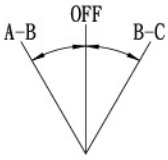

AES-1118-39CF

AES-1118-12 With
Safety Cover
(Carbon Filber color)
Available to be in different color.

AES-1118-40R

AES-1118-43 With Safety
Cover (RED color)
Available to be in different color.

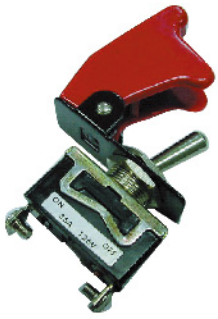

All specifications and information is subject to change without notice.

AES-1118-44R

Toggle Switch with LED light
12VDC 20Amps
LED Color: Red, White,
Yellow and Blue.

AES-1118-45R-T

AES-1118-44 with
Safety Cover –
Transparent color
Available to be in different color.

AES-1118-41

Safety Cover for
Toggle Switch,
Available to be in
different color.

AES-1118-42

Weatherproof Boot
Diameter: 12*0.75

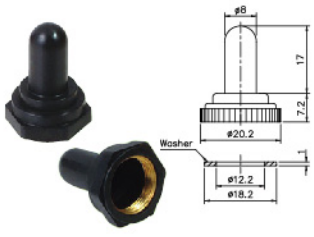

AES-1118-42A

AES-1118-42B

AES-1118-43

Single Pole Toggle Switch
Rating: 12V 20Amps
Contact R.: 500mΩ Max.
Insulation R.: DC 500V 100MΩ Min.
Dielectric Strength: AC 100V 1 minute
Operating Temperature: -20℃ ~ + 65℃
Electrical Life: 50,000 make and break cycles at full load

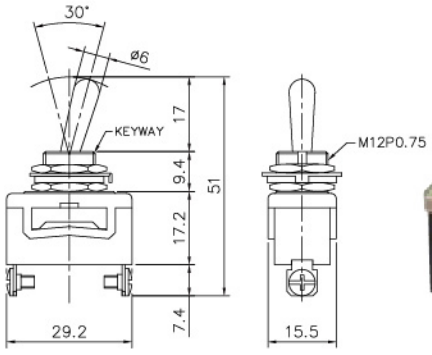

Item no.	Circuitry	Terminal	Type
AES-1118-43	ON-OFF	2 Screws	SPST
AES-1118-43M	(ON)-OFF	2 Screws	SPST
AES-1118-43A	ON-ON	3 Screws	SPDT
AES-1118-43AM	(ON)-ON	3 Screws	SPDT
AES-1118-43B	ON-OFF-ON	3 Screws	SPDT
AES-1118-43BM	(ON)-OFF-(ON)	3 Screws	SPDT
AES-1118-43BM1	(ON)-OFF-ON	3 Screws	SPDT
AES-1118-43C	ON-OFF	3 Screws	SPST

☆For PC termials, add " P " at the end. EX: AES-1118-43P

AES-1118-46

Double Pole Toggle Switch
Rating: 12V 20Amps
Contact R.: 500mΩ Max.
Insulation R.: DC 500V 100MΩ Min.
Dielectric Strength: AC 100V 1 minute
Operating Temperature: -20℃ ~ + 65℃
Electrical Life: 50,000 make and break cycles at full load

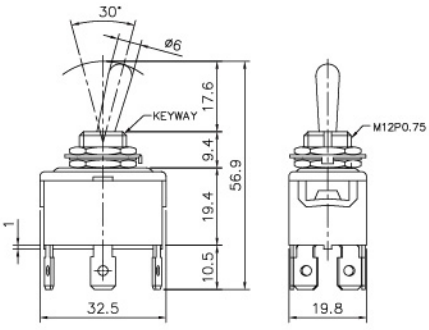

Item no.	Circuitry	Terminal	Type
AES-1118-46	ON-OFF	4 Screws	DPST
AES-1118-46M	(ON)-OFF	4 Screws	DPST
AES-1118-46A	ON-ON	6 Screws	DPDT
AES-1118-46AM	(ON)-ON	6 Screws	DPDT
AES-1118-46B	ON-OFF-ON	6 Screws	DPDT
AES-1118-46BM	(ON)-OFF-(ON)	6 Screws	DPDT
AES-1118-46BM1	(ON)-OFF-ON	6 Screws	DPDT
AES-1118-46C	ON-OFF	4 Screws	DPST

☆For PC termials, add " P " at the end. EX: AES-1118-46P

AES-1118-47

Toggle Switch
ON-OFF
12VDC, 10 Amps

AES-1118-47P

Toggle Switch
ON-OFF
12VDC, 10 Amps

AES-1118-48

12V 20Amps Toggle Switch
Long Lever

Item no.	Circuitry	Terminal	Type	Remark
AES-1118-48	ON-OFF	2 Pins	SPST	
AES-1118-48M	(ON)-OFF	2 Pins	SPST	Momentary Type
AES-1118-48A	ON-ON	3 Pins	SPDT	
AES-1118-48B	ON-OFF-ON	3 Pins	SPDT	
AES-1118-48C	ON-OFF	3 Pins	SPST	Illuminated (Bulb)
AES-1118-48L1	ON-OFF	3 Pins	SPST	Illuminated (LED)

AES-1118-48C-G

AES-1118-48C-BL

AES-1118-48C-O

AES-1118-48C-R

AES-1118-49

12V 20Amps Toggle Switch
Flat Lever

Item no.	Circuitry	Terminal	Type	Remark
AES-1118-49	ON-OFF	2 Pins	SPST	
AES-1118-49A	ON-ON	3 Pins	SPDT	
AES-1118-49B	ON-OFF-ON	3 Pins	SPDT	
AES-1118-49C	ON-OFF	3 Pins	SPDT	Illuminated (Bulb)

AES-1118-49C-G

AES-1118-49C-BL

AES-1118-49C-O

AES-1118-49C-R

All specifications and information is subject to change without notice.

AES-1118-71

Universal Toggle Switch
SPDT/SPDT
12VDC 10Amps
Meet IP 54

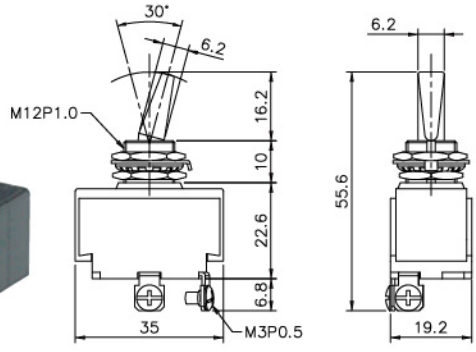

Item no.	Circuitry	Terminal	Type
AES-1118-71	ON-OFF	2 Screws	SPST
AES-1118-71M	(ON)-OFF	2 Screws	SPST
AES-1118-71A	ON-ON	3 Screws	SPDT
AES-1118-71AM	(ON)-ON	3 Screws	SPDT
AES-1118-71B	ON-OFF-ON	3 Screws	SPDT
AES-1118-71BM1	(ON)-OFF-ON	3 Screws	SPDT
AES-1118-71BM2	(ON)-OFF-(ON))	3 Screws	SPDT

☆For PC termials, add " P " at the end. EX: AES-1118-71P

AES-1118-72

Universal Toggle Switch
DPST/DPDT
12VDC 10Amps
Meet IP 54

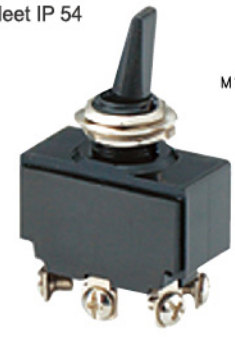

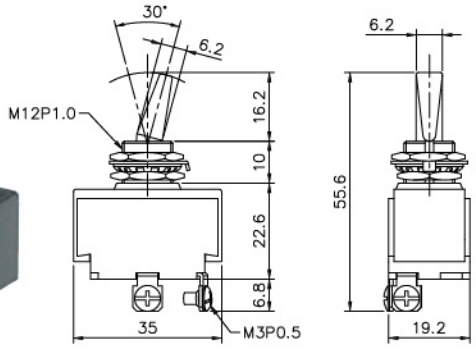

Item no.	Circuitry	Terminal	Type
AES-1118-72	ON-OFF	4 Screws	DPST
AES-1118-72M	(ON)-OFF	4 Screws	DPST
AES-1118-72A	ON-ON	6 Screws	DPDT
AES-1118-72AM	(ON)-ON	6 Screws	DPDT
AES-1118-72B	ON-OFF-ON	6 Screws	DPDT
AES-1118-72BM1	(ON)-OFF-ON	6 Screws	DPDT
AES-1118-72BM2	(ON)-OFF-(ON)	6 Screws	DPDT

☆For PC termials, add " P " at the end. EX: AES-1118-72P

AES-1118-73

Illuminated Toggle Switch
SPST/DPDT
12VDC 10Amps
With Green lever or White lever.
Meet IP 54

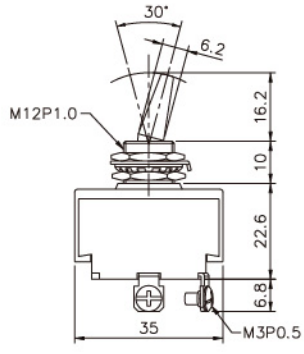

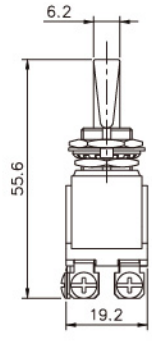

Item no.	Circuitry	Terminal	Type
AES-1118-73	ON-OFF	3 Screws	SPST
AES-1118-73M	(ON)-OFF	3 Screws	SPST
AES-1118-73A	ON-ON	4 Screws	SPDT
AES-1118-73AM	(ON)-ON	4 Screws	SPDT
AES-1118-73B	ON-OFF-ON	4 Screws	SPDT
AES-1118-73BM1	(ON)-OFF-ON	4 Screws	SPDT
AES-1118-73BM2	(ON)-OFF-(ON)	4 Screws	SPDT
AES-1118-74	ON-OFF	4 screws	DPST
AES-1118-74A	ON-ON	5 Screws	SPDT
AES-1118-74AM	(ON)-ON	5 Screws	SPDT
AES-1118-74B	ON-OFF-ON	5 Screws	SPDT
AES-1118-74BM1	(ON)-OFF-ON	5 Screws	SPDT
AES-1118-74BM2	(ON)-OFF-(ON)	5 Screws	SPDT

☆For PC termials, add " P " at the end. EX: AES-1118-73P

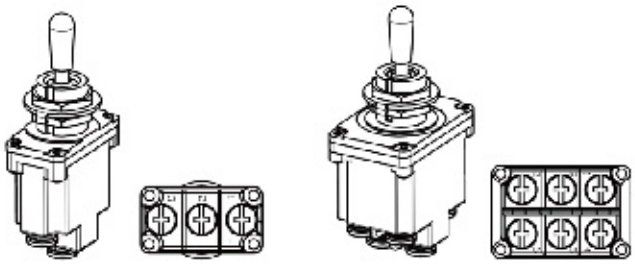

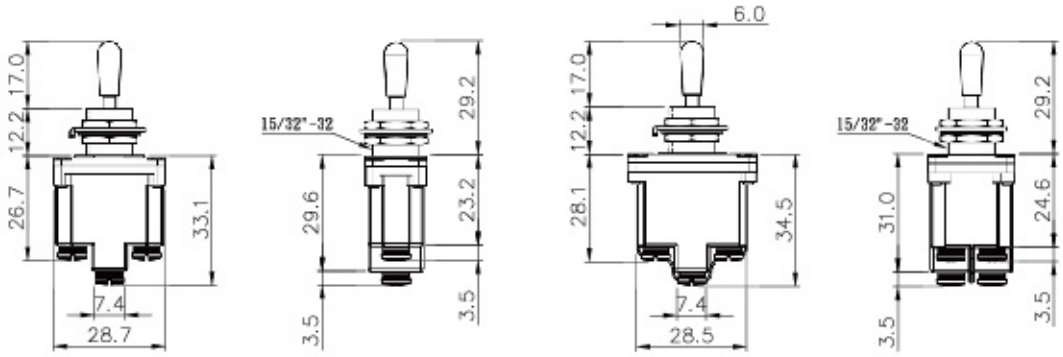

AES-1118-91 Serial
AES-1118-91W Serial

Sealed Toggle Switch
12VDC 15Amps
Single Pole, Double Pole and 4 Pole circuitry
2 or 3 position maintained and momentary type
Molded-In Terminal Insert

AES-1118-91 AES-1118-91W*	Circuit	Lever Type	Function and Position

1	Single Pole
2	Double Pole

P		Plastic
B		Metal Ball

2 position

Code	Pole	Function	Keyway Position	Oppsite Keyway
2	1	OFF-ON	OFF	2-3
3		ON-ON	1-2	2-3
4		(OFF)-ON	(OFF)	2-3
6		(ON)-OFF	(1-2)	OFF
8		(ON)-ON	(1-2)	2-3

NONE-ON-ON

Code	Pole	Function	Keyway Position	Oppsite Keyway
2	2	OFF-ON	OFF	2-3, 5-6
3		ON-ON	1-2, 4-5	2-3, 5-6
4		(OFF)-ON	(OFF)	2-3, 5-6
6		(ON)-OFF	(1-2), (4-5)	OFF
8		(ON)-ON	(1-2), (4-5)	2-3, 5-6

( ) Means momentary type
AES-1118-91W: Toggle Switch with wire

3 position

Code	Pole	Function	Keyway Position	Center Position	Oppsite Keyway
1	1	ON-OFF-ON	1-2	OFF	2-3
5		(ON)-OFF-ON	(1-2)	OFF	2-3
7		(ON)-OFF-(ON)	(1-2)	OFF	(2-3)
21		OFF-ON	None	OFF	2-3
31		NONE-ON-ON	None	1-2	2-3
51		NONE-ON-(ON)	None	1-2	(2-3)
61		NONE-(ON)-OFF	(1-2)	OFF	None

Code	Pole	Function	Keyway Position	Center Position	Oppsite Keyway
1	2	(2-3), (5-6)	1-2, 4-5	OFF	2-3, 5-6
5		(ON)-OFF-ON	(1-2), (4-5)	OFF	2-3, 5-6
7		(ON)-OFF-(ON)	(1-2), (4-5)	OFF	(2-3), (5-6)
21		NONE-OFF-ON	None	OFF	2-3, 5-6
31		NONE-ON-ON	None	1-2, 4-5	2-3, 5-6
51		NONE-ON-(ON)	None	1-2, 4-5	(2-3), (5-6)
61		(ON)-OFF-NONE	(1-2), (4-5)	OFF	None
12		ON-ON-ON	1-2, 4-5	2-3, 4-5	2-3, 5-6
10		ON-ON-ON	1-2, 4-5	1-2, 5-6	2-3, 5-6
50		(ON)-ON-ON	(1-2), (4-5)	1-2, 5-6	2-3, 5-6
70		(ON)-ON-(ON)	(1-2), (4-5)	1-2, 5-6	(2-3), (5-6)

All specifications and information is subject to change without notice.

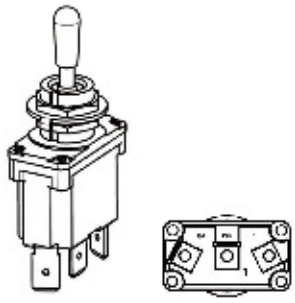

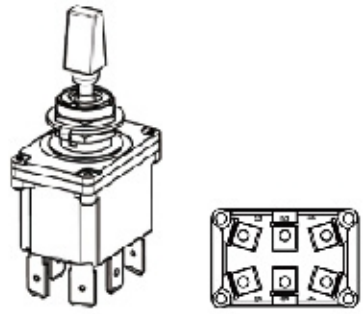

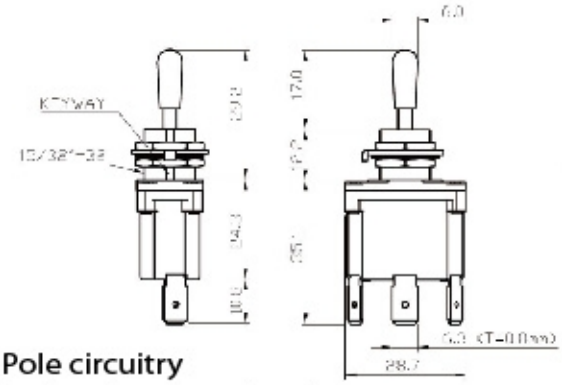

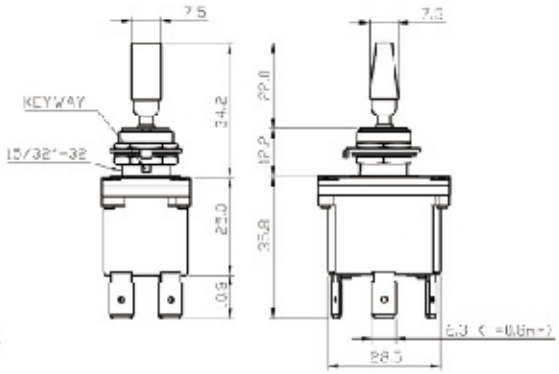

AES-1118-92 Serial

Sealed Toggle Switch
12VDC 15Amps
Single Pole or Double Pole circuitry
2 or 3 position maintained and momentary type

AES-1118-92 — Terminal Type — Circuit — Lever Type — Function and Position

P	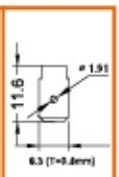	250 TAB
2	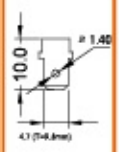	187 TAB
S	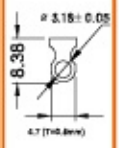	Solder Lug
(NONE)	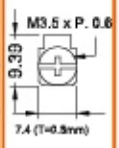	Screw

1	Single Pole
2	Double Pole

P		Plastic
B		Metal Ball

2 position

Code	Pole	Function	Keyway Position	Oppsite Keyway
2	1	OFF-ON	OFF	2-3
3		ON-ON	1-2	2-3
4		(OFF)-ON	(OFF)	2-3
6		(ON)-OFF	(1-2)	OFF
8		(ON)-ON	(1-2)	2-3

Code	Pole	Function	Keyway Position	Oppsite Keyway
2	2	OFF-ON	OFF	2-3, 5-6
3		ON-ON	1-2, 4-5	2-3, 5-6
4		(OFF)-ON	(OFF)	2-3, 5-6
6		(ON)-OFF	(1-2), (4-5)	OFF
8		(ON)-ON	(1-2), (4-5)	2-3, 5-6

( ) Means momentary type

3 position

Code	Pole	Function	Keyway Position	Center Position	Oppsite Keyway
1	1	ON-OFF-ON	1-2	OFF	2-3
5		(ON)-OFF-ON	(1-2)	OFF	2-3
7		(ON)-OFF-(ON)	(1-2)	OFF	(2-3)
21		NONE-OFF-ON	None	OFF	2-3
31		NONE-ON-ON	None	1-2	2-3
51		NONE-ON-(ON)	None	1-2	(2-3)
61		(ON)-OFF-NONE	(1-2)	OFF	None

Code	Pole	Function	Keyway Position	Center Position	Oppsite Keyway
1	2	ON-OFF-ON	1-2, 4-5	OFF	2-3, 5-6
5		(ON)-OFF-ON	(1-2), (4-5)	OFF	2-3, 5-6
7		(ON)-OFF-(ON)	(1-2), (4-5)	OFF	(2-3), (5-6)
21		NONE-OFF-ON	None	OFF	2-3, 5-6
31		NONE-ON-ON	None	1-2, 4-5	2-3, 5-6
51		NONE-ON-(ON)	None	1-2, 4-5	(2-3), (5-6)
61		(ON)-OFF-NONE	(1-2), (4-5)	OFF	None
12		ON-ON-ON	1-2, 4-5	2-3, 4-5	2-3, 5-6
10		ON-ON-ON	1-2, 4-5	1-2, 5-6	2-3, 5-6
50		(ON)-ON-ON	(1-2), (4-5)	1-2, 5-6	2-3, 5-6
70		(ON)-ON-(ON)	(1-2), (4-5)	1-2, 5-6	(2-3), (5-6)